START

AlphaServer 1000 4/266 Systems

	Order Number	Operating System	Server Systems, 64Bits 266MHz				
#1	PB72B-AA/AB	Windows NT Server	64MB	RX,CD	2.1GB	NI	SVGA
	PB72B-AC/AD	BackOffice Server	64MB	RX,CD	2.1GB	NI	SVGA
	PB72B-FA/FB	Digital UNIX	64MB	RX,CD	2.1GB	NI	SVGA
	PB72B-MA/MB 120V/240V	OpenVMS	64MB	RX,CD	2.1GB Narrow	NI	Option

For 240V Use, Select Power Cord and Keyboard.

#2 1x BN19C-2E EUROPE BN19A-2E (GB) BN19K-2E (DK) BN19M-2E (I) BN19E-2E (CH) BN18L-2E (IL) BN19S-2E India

	Keyboard				SVGA Color Monitor
#3	LK471 NT/UNIX	-AE (GB)	-AH (NL)	-AN (N)	Monitor VRC15-KA 15"
#4		-AB (B)	-AI (I)	-AP (F)	VRT17-PA 17"
		-AD (DK)	-AK (CH)F	-AS (E)	VRC21-PA 21"
	LK461 OVMS	-AF (FI)	-AL (CH)G	-AT (IL)	PB2GA-AA EISA based graphics
		-AG (D)	-AM (S)	-AV (P)	

Internal Options:

Memory Expansion

			System	Max memory
PB7MA-AB	32MB	kit	kit kit kit 64 MB	4x 128MB = 512MB
PB7MA-AC	64MB	kit		
PB7MA-AD	128MB	kit		

Internal Storage

Tape

PBXTL-CA 8GB DAT tape drive

Narrow disks

RZ26N-VA 1.05GB hard disk, narrow
RZ28M-VA 2.1GB hard disk, narrow
RZ29B-VA 4.3GB hard disk, narrow

Wide disks

KZPSC-AA RAID 1-port PCI-controller ,wide
KZPSC-BA RAID 3-port PCI-controller ,wide
PB7HA-BA Cable set, take 1 or 2 wide
RZ26N-VW 1.05GB hard disk, wide
RZ28M-VW 2.1GB hard disk, wide
RZ29B-VW 4.3GB hard disk, wide

Controllers

KZPAA-AA F-SCSI-2 PCI-controller, narrow
PB7HA-AA Internal cable, narrow
KFESB-AA DSSI EISA-controller, OpenVMS
DE450-CA PCI-based Ethernet controller
DEFEA-AA FDDI EISA, single attachment
DEFPA-AA FDDI PCI, single attachment
DNSES-AA Synchronous coms. EISA OpenVMS

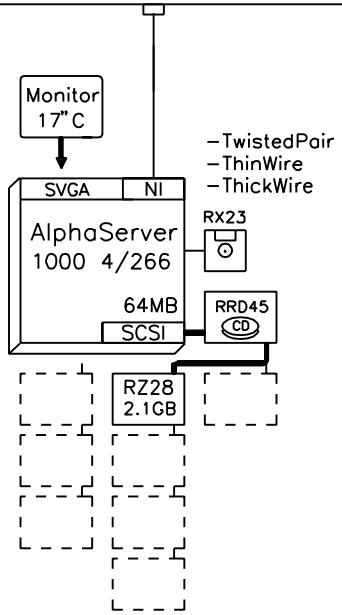

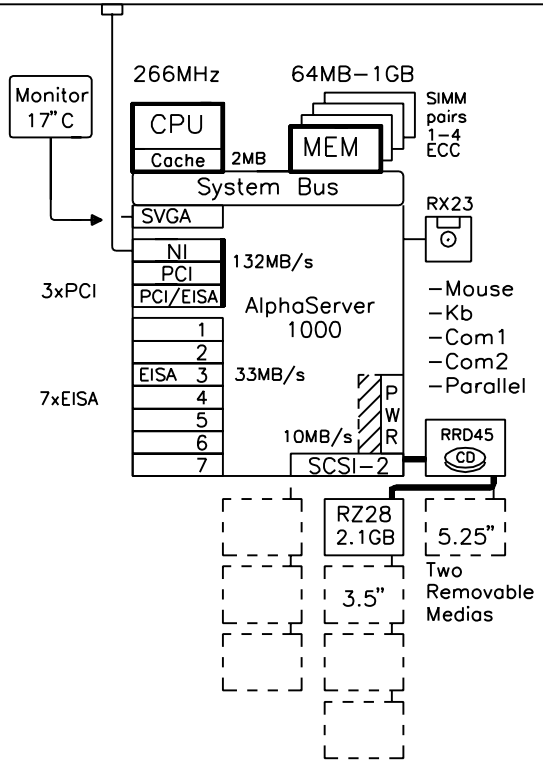

Licenses included per system type:

- Windows NT Server + 5-client access, V3.51 media kit.
- BackOffice Server, V3.51 media kit.
- Digital UNIX 2-user base license, NAS BASE SERVER 150 license
- OpenVMS base license + system manager license, NAS BASE SERVER 200 license

External Options:

Tape

TZ87-TA 20GB tape drive,table top
BN23G-01 SCSI-cable, narrow
BN19C-2E PowerCable, European
KZPAA-AA Recomended controller ,narrow

Wide disks

KZPSC-AA RAID 1-port PCI-controller ,wide
KZPSC-BA RAID 3-port PCI-controller, wide
BN31S-1E Oder 1 or 2 SCSI cables , wide
BA356-KC StorageWorks pedestal, wide
BN19C-2E Power cable, European
RZ26N-VW 1.05GB hard disk, wide
RZ28M-VW 2.1GB hard disk, wide
RZ29B-VW 4.3GB hard disk, wide

Total: 1-7

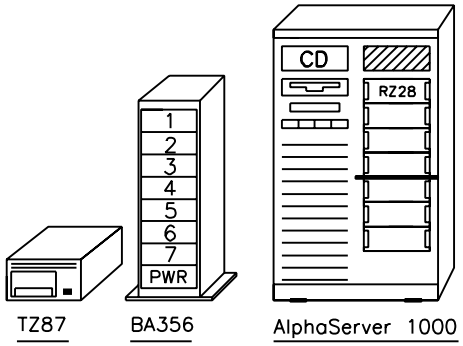

H7290-AA Second Power Suply

Software Processor Code: E

GEAS100A

digital 13-Feb-1996 Detail Layer
GOLDas10004266a

1000

AlphaServer 1000 4/266 Systems

GOLDEN EGGS Visual Configurations, Helsinki