START

AlphaServer 1000A 5/500 Systems

	Order Number	Operating System	Server Systems, 64Bits				500MHz
#1	PB79B-AA/AB	Windows NT	128MB	RX,CD	4.3GB	NI	NOgraph
	PB79B-AC/AD		256MB	RX,CD	4.3GB	NI	NOgraph
	PB79B-FA/FB	DIGITAL UNIX	128MB	RX,CD	4.3GB	NI	NOgraph
	PB79B-FC/FD		256MB	RX,CD	4.3GB	NI	NOgraph
	PB79B-MA/MB	OpenVMS	128MB	RX,CD	4.3GB	NI	NOgraph
	PB79B-MC/MD		256MB	RX,CD	4.3GB	NI	NOgraph
	120V/240V				Wide		

For 240V Use, Select Power Cord and Keyboard.

#2 2x BN19C-2E EUROPE BN19A-2E (GB) BN19K-2E (DK) BN19M-2E (I) BN19E-2E (CH) BN18L-2E (IL) BN19S-2E India

Keyboard

#3 LK471 NT/UNIX -AE (GB) -AH (NL) -AN (N) -AB (B) -AI (I) -AP (F) -AD (DK) -AK (CH)F -AS (E)

#4 LK461 OVMS -AF (FI) -AL (CH)G -AT (IL) -AG (D) -AM (S) -AV (P)

SVGA Color Monitor

Monitor SN-VRCX5-WA/W3 SN-VRTX7-WA/W3 SN-VRCX1-WA/W3

PB2GA-JD Trio64 S3 2MB

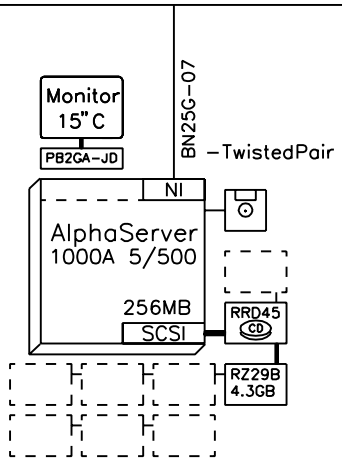

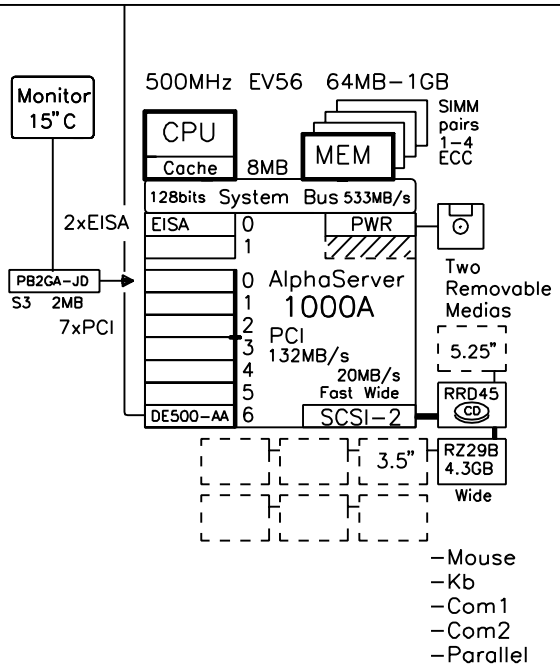

Internal Options:

Memory Expansion

PB7MA-CB	32MB	kit
PB7MA-CC	64MB	kit
PB7MA-CD	128MB	kit
PB7MA-CE	256MB	kit

System: kit kit kit 64 MB

Max memory 4x 256MB = 1GB

Internal Storage

Load/Backup

PBXTL-DA	8GB DAT tape drive
PBXTZ-AA	2GB QIC tape drive

Wide disks

KZPSC-AA	RAID 1-port PCI-controller ,wide
KZPSC-BA	RAID 3-port PCI-controller ,wide
PB7HA-BA	Cable set, take 1 or 2 wide
DS-RZ26N-VZ	1.05GB hard disk, wide 5400
DS-RZ28M-VZ	2.1GB hard disk, wide 5400
RZ28D-VW	2.1GB hard disk, wide 7200
RZ29B-VW	4.3GB hard disk, wide 7200

Controllers

KZPAA-AA	F-SCSI-2 PCI-controller, narrow
PB7HA-AA	Internal cable, narrow/wide
KFPSA-AA	PCI-based DSSI controller, OpemVMS
DE450-CA	PCI-based Ethernet Thin/Thick/Twist
DE500-AA	PCI-based Fast Ethernet
DEFPA-AB	FDDI EISA, single attachment
DEFPA-AA	FDDI PCI, single attachment
DNSES-AA	Synchronous coms. EISA OpenVMS
DJ-ML200-BA	4MB PrestoServe

Licenses included per system type:

- Windows NT Server V4.0 plus 10-client access, note: NT CD.kit is included in North American packages.
  For other NT packages order QB-23C8A-SB International English kit or language variant kit QB-23C**-SB.
- DIGITAL UNIX V4.0B unlimited,server extension, Internet AlphaServer System Software kit.
- OpenVMS V7.1 base with System Manager license and Enterprise Integrated Package.

External Options:

Tape

TZ88N-TA	40GB tape drive, table top
BN23G-01	SCSI-cable, narrow
BN19C-2E	PowerCable, European
KZPAA-AA	Recomended controller ,narrow

Wide disks

KZPSC-AA	RAID 1-port, PCI, wide
KZPSC-BA	RAID 3-port, PCI, wide
BN31S-1E	Order 1 or 2 SCSI cables, wide
BA356-KC	StorageWorks pedestal, wide
BN19C-2E	Power cable, European
DS-RZ26N-VZ	1.05GB hard disk, wide
DS-RZ28M-VZ	2.1GB hard disk, wide
RZ29B-VW	4.3GB hard disk, wide

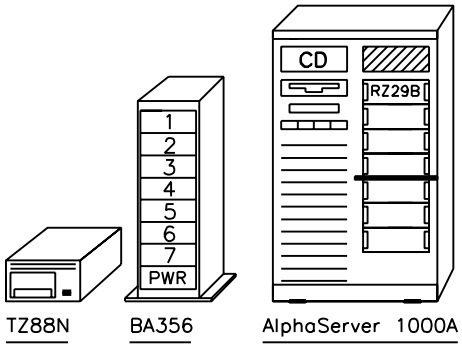

H7290-AA Second Power Suply

SPECint95	SPECfp95	
14.4	17.8	500MHz

Software Processor Code: E

http://www.digital.com/golden-eggs

1000A

digital 18-Jun-1997 Detail Layer GEA10D

AlphaServer 1000A 5/500 Systems

GOLDEN EGGS Visual Configurations, Helsinki