START

AlphaServer 1000A 5/300 Systems

	Order Number	Operating System	Server Systems, 64Bits 300MHz				
#1	PB77B-AA/AB	Windows NT Server	64MB	RX,CD	2.1GB	NI	SVGA
	PB77B-FA/FB	Digital UNIX	64MB	RX,CD	2.1GB	NI	SVGA
	PB77B-MA/MB 120V/240V	OpenVMS	64MB	RX,CD	2.1GB Wide	NI	SVGA

For 240V Use, Select Power Cord and Keyboard.

#2 1x BN19C-2E EUROPE BN19A-2E (GB) BN19K-2E (DK) BN19M-2E (I) BN19E-2E (CH) BN18L-2E (IL) BN19S-2E India

Keyboard

#3 LK471 NT/UNIX -AE (GB) -AH (NL) -AN (N) -AB (B) -AI (I) -AP (F) -AD (DK) -AK (CH)F -AS (E) -AF (FI) -AL (CH)G -AT (IL) -AG (D) -AM (S) -AV (P)

#4 LK461 OVMS

SVGA Color Monitor

Monitor

VRC15-KA 15"
VRT17-PA 17"
VRC21-PA 21"

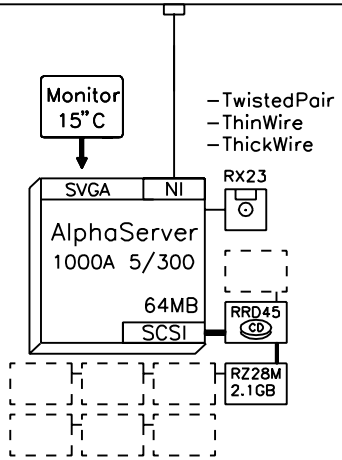

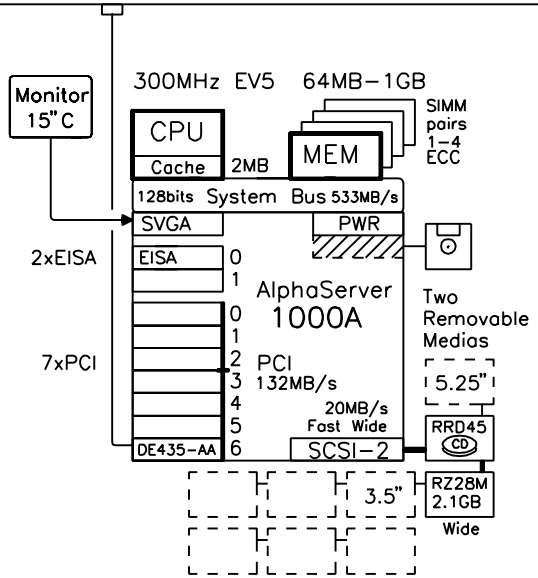

Internal Options:

Memory Expansion at 300MHz

PB7MA-CB	32MB kit	System: kit kit kit 64 MB
PB7MA-CC	64MB kit	Max memory 4x 256MB = 1GB
PB7MA-CD	128MB kit	
PB7MA-CE	256MB kit	

Internal Storage

Load/Backup

PBXTL-CA	8GB DAT tape drive
PBXTZ-AA	2GB QIC tape drive

Wide disks

KZPSC-AA	RAID 1-port PCI-controller ,wide
KZPSC-BA	RAID 3-port PCI-controller ,wide
PB7HA-BA	Cable set, take 1 or 2 wide
RZ26N-VW	1.05GB hard disk, wide 5400
RZ28M-VW	2.1GB hard disk, wide 5400
RZ28D-VW	2.1GB hard disk, wide 7200
RZ29B-VW	4.3GB hard disk, wide 7200

Controllers

KZPAA-AA	F-SCSI-2 PCI-controller, narrow
PB7HA-AA	Internal cable, narrow/wide
KFPSA-AA	PCI-based DSSI controller, OpemVMS
DE435-AA	PCI-based Ethernet controller
DE500-XA	PCI-based Fast Ethernet
DEFEA-AA	FDDI EISA, single attachment
DEFPA-AA	FDDI PCI, single attachment
DNSES-AA	Synchronous coms. EISA OpenVMS
DJ-ML200-BA	4MB PrestoServe

Licenses included per system type:

- Windows NT Server + 5-client access, V3.51 media kit.
- Digital UNIX 2-user base license, NAS 200 license
- OpenVMS base license with System Manager license and NAS 200 license.

External Options:

Tape

TZ88N-TA	40GB tape drive, table top
BN23G-01	SCSI-cable, narrow
BN19C-2E	PowerCable, European
KZPAA-AA	Recomended controller ,narrow

Wide disks

KZPSC-AA	RAID 1-port PCI-controller ,wide
KZPSC-BA	RAID 3-port PCI-controller, wide
BN31S-1E	Order 1 or 2 SCSI cables, wide
BA356-KC	StorageWorks pedestal, wide
BN19C-2E	Power cable, European
RZ26N-VW	1.05GB hard disk, wide
RZ28M-VW	2.1GB hard disk, wide
RZ29B-VW	4.3GB hard disk, wide

Total: 1-7

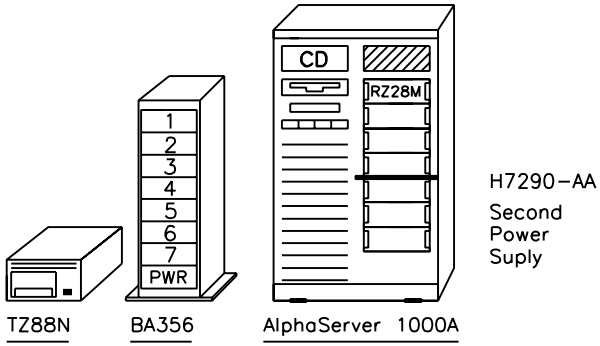

H7290-AA Second Power Suply

Software Processor Code: E

GEAS102A

digital	20-Oct-1996	Detail Layer
	GOLDas1000a5300a	

AlphaServer 1000A 5/300 Systems

GOLDEN EGGS Visual Configurations, Helsinki

1000A