AlphaServer 2000 5/375 Systems

START

	Order Number	Operating System	Server Systems, 64Bits 375MHz
#1	DN-245D1-S9	Windows NT Server	128MB RX,CD 4.3GB NI SVGA
	DA-245D1-S9	Digital UNIX	128MB RX,CD 4.3GB NI SVGA
	DY-245D1-S9	OpenVMS	128MB RX,CD 4.3GB NI SVGA
	-D9	=2x CPU	Wide

For 240V Use, Select Power Cord and Keyboard.

#2 1x BN19C-2E EUROPE BN19A-2E (GB) BN19K-2E (DK) BN19M-2E (I)
BN19E-2E (CH) BN18L-2E (IL) BN19S-2E India

Keyboard

#3 LK471 NT/UNIX -AE (GB) -AH (NL) -AN (N)
-AB (B) -AI (I) -AP (F)
#4 LK461 OVMS -AD (DK) -AK (CH)F -AS (E)
-AF (FI) -AL (CH)G -AT (IL)
-AG (D) -AM (S) -AV (P)

SVGA Color Monitor

Monitor
VRC15-KA 15"
VRT17-PA 17"
VRC21-PA 21"

Internal Options:

SMP: Second CPU module 375MHz — 490NR-AA NT, 490AR-AA UNIX, 490YR-AA OVMS + H7895-AA Second Power Suply

Memory Expansion

MS452-UB 128MB upd → 2x 128MB Max two 2x Max Memory 2x 512MB = 1GB
MS452-BA
Base module Second option

Internal Storage

Tape

TLZ07-LG	8GB DAT tape drive

Wide disks

RZ26L-VW	1.05GB hard disk, wide
RZ28D-VW	2.1GB hard disk, wide
RZ29B-VW	4.3GB hard disk, wide
KZPSC-BA	RAID 3-port PCI-controller ,wide
BC25U-2H	Order 1 or 2 SCSI-cable, wide

Controllers

PBXGA-AA	PCI-based ZLXp-E1 8PL Graphics OSF & VMS
PBXGA-AN	PCI-based ZLXp-E1 8PL Graphics NT
KZPSA-BB	PCI-based Fast-Wide-Differential SCSI
KFESB-AA	DSSI EISA-controller, OpenVMS
KFPSA-AA	PCI-based DSSI controller, OpemVMS
BC29S-09	DSSI cable
CIPCA-AA	PCI-based CI-controller, OpenVMS
DEFPA-AA	FDDI PCI, single attachment
DEFEA-AA	FDDI EISA, single attachment
DE435-AA	PCI-based Ethernet controller
DE425-AA	EISA-based Ethernet controlle UNIX, OVMS
DNSES-AA	Synchronous coms. EISA UNIX, OVMS

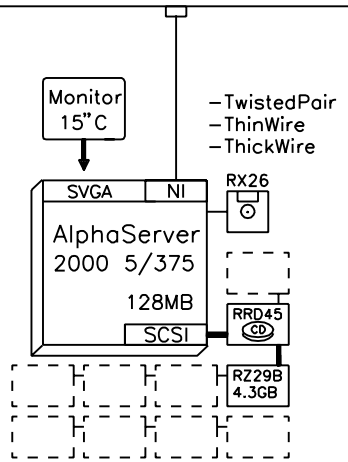

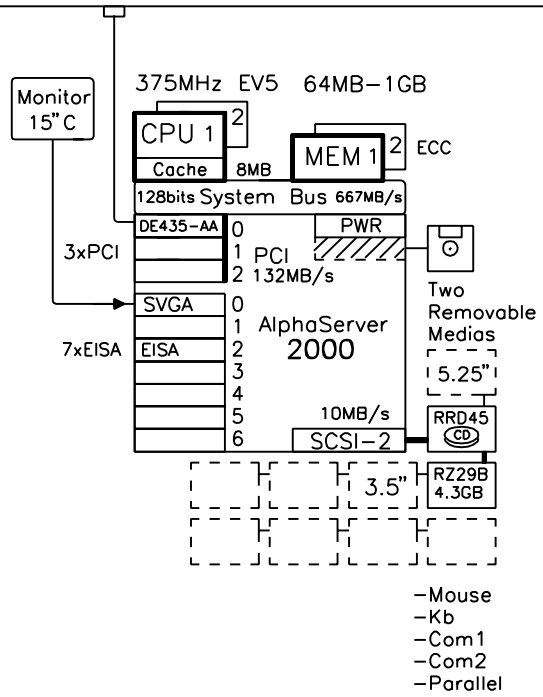

Licenses included per system type:

- Windows NT Server + 5-client access, V3.51 media kit.
- Digital UNIX operating system base license Digital NAS Base Server 200 license
- OpenVMS operating system base license Digital NAS Base Server 200 license

External Options:

Tape

TZ88N-TA	40GB tape drive, table top
BN23G-01	SCSI-cable, narrow
BN19C-2E	PowerCable, European
KZPAA-AA	Recomended controller ,narrow
BC25S-2F	Internal narrow cable
BN21H-02	Ext narrow cable to BA350-KF
BN21N-02	Ext narrow cable to BA356-KC

Wide disks

KZPSC-BA	RAID 3-port PCI-controller, wide
BN31S-1E	Oder 1 or 2 SCSI cables , wide
BA356-KC	StorageWorks pedestal, wide
BN19C-2E	Power cable, European
RZ26L-VW	1.05GB hard disk, wide
RZ28D-VW	2.1GB hard disk, wide
RZ29B-VW	4.3GB hard disk, wide

Total: 1-7

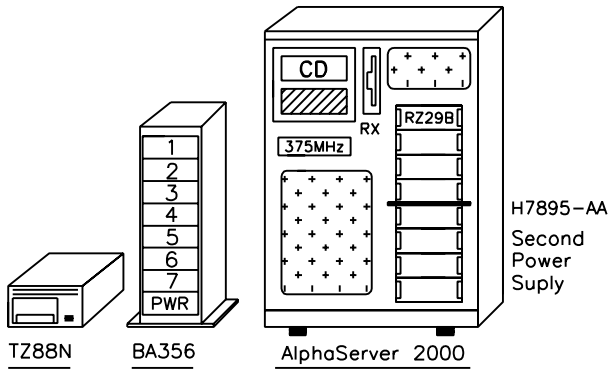

Software Processor Code: G

GEAS202A

digital 21-Oct-1996 Detail Layer
GOLDas20005375a

AlphaServer 2000 5/375 Systems
GOLDEN EGGS Visual Configurations, Helsinki

2000